# How to Use the Wet Retroreflection Test Chamber â€“ ISO 20471

## Description

### C.1 Principle

A specimen of the material shall be mounted in a vertical plane and shall be subjected to a continuous spray of water droplets.

Measurements shall be made of the coefficient of retroreflection of the wetted surface while the spray is maintained, simulating the optical behaviour of a surface in a shower of rain.

### C.2 Apparatus

AHP PLASTIK MAKINA

A suitable apparatus for mounting the specimen in the spray of water is illustrated in Figure C.1.

The specimen (I) shall be supported on the vertical specimen holder (2) above the catch trough (3) and drain (4). The specimen holder shall be rigidly attached to the goniometer table (not shown) but shall be held away from it. The spray nozzle (S) shall be rigidly supported in a position which is fixed relative to the specimen and shall be supplied with tap water at constant but adjustable pressure through a flexible joint (6) or hose.

The nozzle shall be set one meter above the center of the specimen and shall be angled so that the spray strikes the specimen at an angle of 10Â° to the vertical. The specimen, the specimen holder and the spray nozzle shall be enclosed in a cover (7) designed to protect the optical apparatus from water.

Preferably, the cover is made of or incorporates large areas of rigid transparent plastics material for visibility and has at least one removable panel or door for access. A square aperture (8) with side measuring 150 mm shall be provided for the light path and a gutter (9) shall protect this aperture from falling water. The region of the cover near to this aperture shall be painted matt black to reduce stray reflections. The nozzle shall be of the full cone type and shall have an orifice of diameter 1.19 mm with an appropriately designed feed pipe producing a substantially uniform solid cone spray.

### C.3 Procedure

Due care shall be taken to avoid stray light.

A flat, square specimen of the material of at least 50 mm lateral length shall be mounted in a vertical plane on the vertical specimen holder so that the holder does not protrude beyond the edge of the specimen at any point. If the material is orientation sensitive when dry, as described in 61, it shall be mounted so that measurements can be made at the orientation which gave the lowest performance when dry. The nozzle and water supply shall be adjusted to subject the specimen to a spray of ordinary tap water such that the whole face of the specimen is within the envelope of the spray, the angle between the surface of the specimen and the water striking it is not less than 5Â°, and the flow rate striking the specimen is equivalent to a rainfall, in millimeters per hour, of 50/tan 10Â° (284 mm/h) as

measured in a horizontal collector. The spray shall be maintained in a steady-state for at least 2 min before and throughout the measurement.

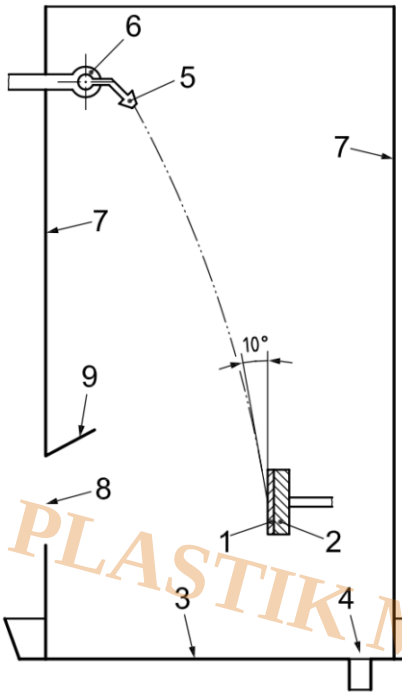


AHP PLASTIK MAKINA

**Key**

| | | | |
|---|---|---|---|
| 1 | specimen | 6 | flexible joint |
| 2 | holder | 7 | cover |
| 3 | catch trough | 8 | aperture |
| 4 | drain | 9 | gutter |
| 5 | spray nozzle | | |

**Figure C.1 — Apparatus for the wet retroreflection test**

# Setup of the machine

1- Put the machine on a robust place

2- Connect the water inlet, drain line, and main power on the back side of the machine



Direct Sales by Manufacturer

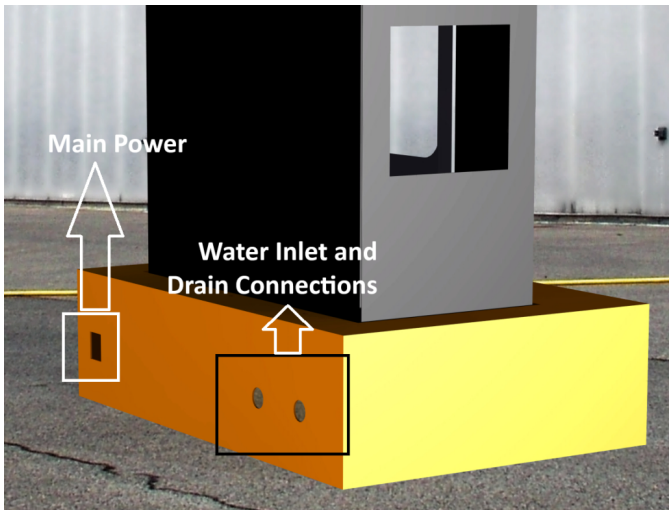


3- Open the top door of the machine and adjust the angle of spray

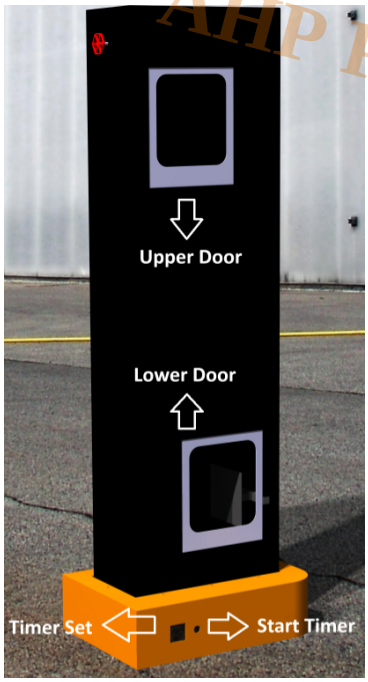


AHP PLASTIK MAKINA

4- Open the bottom door and slide out the sample holder

5- Prepare a sample of standard size and attach it to the sample holder. Slide the sample holder on place

6- Set the time of water spray and and start the timer

7- After the time passed, water will be cutoff automatically

8- For calibration of the water spray to be as standard use the valve on the top left corner and volume measuring cut comes to you with the machine.

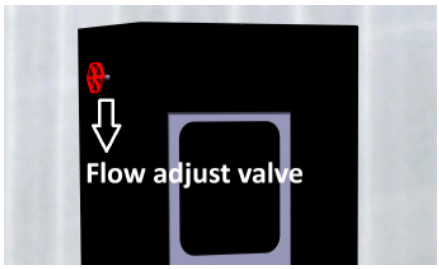


**Category**

1. How to Use

AHP PLASTIK MAKINA