Cathodic Disbondment Test According to ISO 21809-3 â€“ Testing Equipment

Description

F.1 General
The test consists of assessing the resistance to disbondment of damage to the FJC when exposed to cathodic polarization.
The test shall be performed on a test sample taken from the coated components previously subjected to
holiday detection (see Annex B), and in which an artificial defect of a defined size has been drilled. The test may be performed on the coated component without cutting test samples.
F.2 Equipment
F.2.1 Electrical source, consisting of a controlled voltage d.c. power unit capable of supplying 20 mA to each test area simultaneously.
Except when otherwise specified, a cathodic polarization potential of âˆ’1500 mV to a saturated calomel reference electrode (equivalent to UH equal to âˆ’1260 mV where UH is the potential of the standard hydrogen electrode) shall be maintained. The potentials are defined as follows:
âŽ¯ â€œEâ€• is the potential of the â€œworking electrodeâ€• with regard to the â€œreference electrodeâ€•.
âŽ¯ â€œVâ€• is the difference of potential between the â€œworking electrodeâ€• and the â€œauxiliary electrodeâ€•.

F.2.2 Electrolytic cell, having a typical test-cell configuration as shown in Figure F.1 for large-diameter components and as in Figures F.2 and F.3 for small-diameter components.
The electrolytic cell shall comprise of
âŽ¯ a rigid plastic pipe with an internal diameter of minimum 50 mm. The height shall be such that the total
volume of the electrolyte is equal to or greater than 150 cm3 with a minimum height of the electrolyte of 70 mm;
âŽ¯ a rigid plastic cover in which holes shall be drilled to allow the passage of the electrodes and any other
measuring instruments deemed necessary, and to allow the escape of hydrogen.
F.2.3 Electrodes
F.2.3.1 Reference electrode, capable of giving a suitable potential (see F.2.1) and suitable for the test temperature required, placed in an electrode holder situated in a glass pipe with a porous end diaphragm.
The end of this assembly shall be placed approximately 10 mm from the surface of the coating and approximately 20 mm from the coating defect.
F.2.3.2 Auxiliary electrode (anode), consisting of an inert material, e.g. platinum wire, 0,8 mm to 1,0 mm in diameter.
It shall be immersed in the electrolyte to within approximately 10 mm over the coating defect.
The ratio of the surface area of the anode to that of the cathode shall be greater than 1.

AHP PLASTIK MAKINA

F.2.3.3 Working electrode (cathode), represented by the artificial defect, 6 mm in diameter, with a maximum depth of 0,5 mm in the steel substrate (see Figure F.4).
F.2.4 Electrolyte, consisting of a 3 % solution of NaCl in distilled or deionized water.
The solution shall be made from analar grade sodium chloride. The pH at 23 Â°C Â± 2 Â°C during the test shall be in the range of 6 to 9.
The height of the electrolyte in the cell shall be 75 mm Â± 5 mm.
F.2.5 Heating equipment, suitable to establish and to maintain the test temperature of the sample.
If not heated in an oven, the temperature shall be checked on the artificial defect by an appropriate means, e.g. a temperature sensor.

F.3 Sampling
The test sample shall be cold cut from a coated component and shall have a minimum size of 80 mm Ã— 80 mm, unless the test is performed on the body of the coated component.
Unless otherwise specified by end user and/or purchaser, tests samples shall not be taken from the weld area. For each sample, the thickness of the area of the coating subject to the test shall be measured and recorded.
The integrity of the coating on all test samples shall be checked by holiday detection (see Annex B).
A 6 mm diameter hole (see Figure F.4) shall be drilled through the coating in the centre of the test sample
using a standard drill bit. The depth of the drilled hole in the steel substrate shall not exceed 0,5 mm. At the initiation of the test, the total surface area subject to the test shall be free from residual coating.
The test area shall be degreased using a suitable solvent and then rinsed with potable water and subsequently dried.
F.4 Procedure
The plastic pipe forming the electrolytic cell shall be sealed using a suitable sealant, e.g. a chemically inert
adhesive. The artificial defect shall be in the centre of the cell.
The cell shall be filled with the NaCl electrolyte (F.2.4). The test temperature shall be controlled within Â± 2 Â°C. A negative cathodic potential shall be applied between the reference and working electrodes (see Figures F.1, F.2 and F.3), with an accuracy of Â± 10 mV. If a saturated calomel electrode is used, the potential shall be â^'500 mV.
The test shall be performed for the test period required. The level of the electrolyte shall be readjusted with distilled or deionized water, if necessary.

F.5 Investigation procedure
After the test, the cell with the electrolyte shall be removed. The test sample shall be rinsed with water and dried.

After drying, the area of the coating subjected to the test shall be examined in accordance with the following method.
âŽ¯ Inspect and assess each coating immediately after the test period.
âŽ¯ Detach the plastic pipe from the test site.
âŽ¯ Using a lint-free paper towel, wipe along the surface of the coating and cathode area to remove moisture.
âŽ¯ Make about 12 radial incisions, using a sharp knife, through the coating to the substrate, extending outwards from the holiday for a distance of at least 40 mm. Make these incisions at an angle of

AHP PLASTIK MAKINA

approximately 30Â° from each other.
âŽ¯ Insert the knife point into the centre portion of the holiday down to the metal substrate. Using a gentle
levering action, peel away slowly a radial section of coating continuing until firm adhesion is encountered.
As loss of adhesion is not always obvious, carefully examine the substrate for signs of residual coatings,
which indicates that disbondment has not occurred.
âŽ¯ Repeat with each radial segment.
NOTE For thick coatings that cannot be peeled, it is sometimes necessary to remove the coating from the substrate using a chisel to assess the extent of disbondment.
F.6 Results
The result of the cathodic disbondment test shall be defined as the arithmetic mean value of the 12 single
values. The mean value shall be recorded.

AHP PLASTIK MAKINA

Dimensions in millimetres

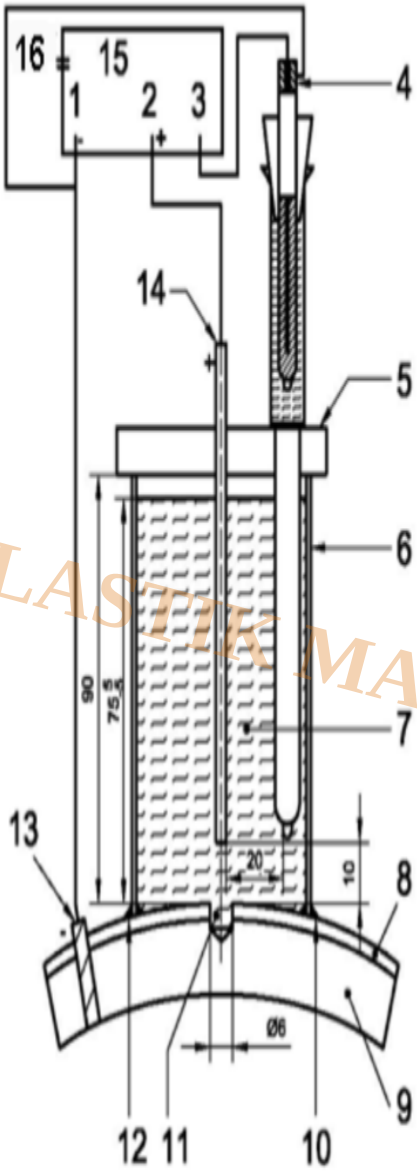

AHP PLASTIK MAKINA

Key

1 working electrode
2 electrode (anode)
3 electrode (reference)
4 reference electrode
5 plastic cover
6 plastic pipe, minimum internal ∅ 50 mm
7 electrolyte ⩾ 150 ml
8 coating
9 steel test piece
10 sealing material
11 artificial defect, ∅ 3 mm to 6 mm if coating thickness is less than 1 mm; ∅ 6 mm in other cases
12 sealing material
13 electrode (cathode)
14 platinum electrode, ∅ 0,8 mm to 1,0 mm (anode)
15 potentiostat
16 220 V power supply

Figure F.1 — Electrolytic cell for large-diameter pipe

Direct Sales by Manufacturer

Dimensions in millimetres

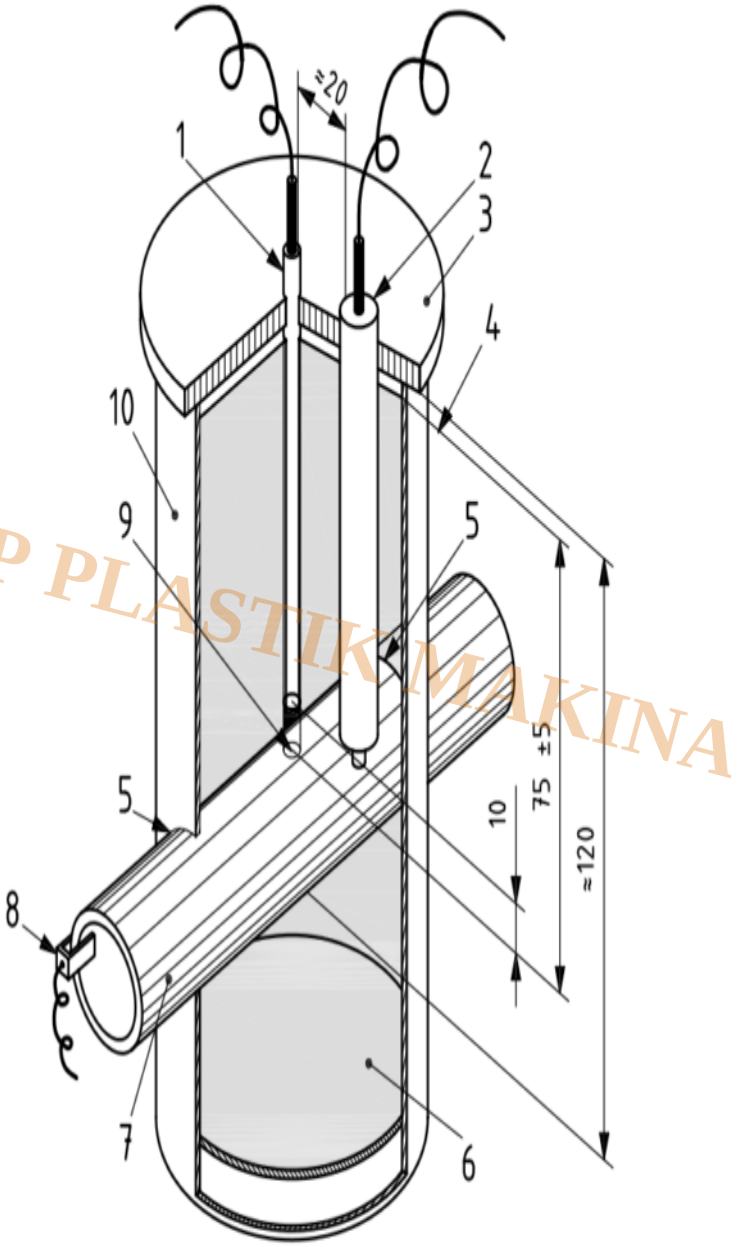

AHP PLASTIK MAKINA

Key

1 platinum electrode, ∅ 0,8 mm to 1,0 mm (anode)
2 reference electrode
3 plastic cover
4 electrolyte level
5 sealing material
6 electrolyte
7 coated pipe
8 working electrode (cathode)
9 artificial defect, ∅ 3 mm to 6 mm if coating thickness is less than 1 mm; ∅ 6 mm in other cases
10 plastic pipe, minimum internal ∅ 50 mm

Figure F.2 — Electrolytic cell for small-diameter pipe — Example 1

Direct Sales by Manufacturer

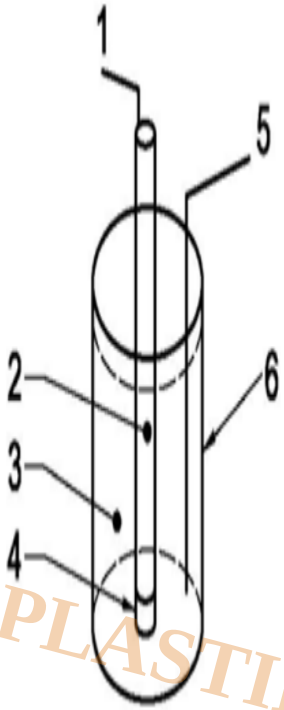

AHP PLASTIK MAKINA

Key

1 to negative lead (–)
2 holiday
3 electrolyte
4 end cap
5 to positive lead (+)
6 beaker

Figure F.3 – Electrolytic cell for small-diameter pipe – Example 2

Direct Sales by Manufacturer

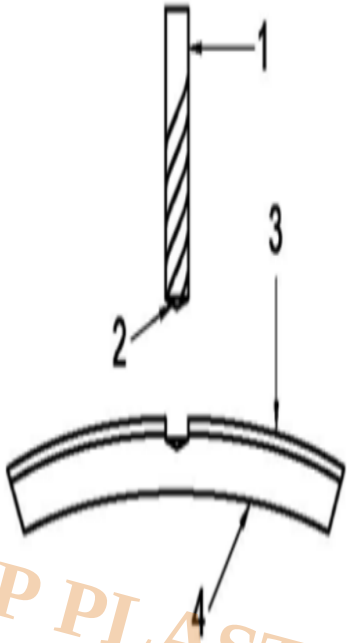

AHP PLASTIK MAKINA

Key

1 fluted and mill face mill ∅ 3 mm to 6 mm if coating thickness is less than 1 mm; ∅ 6 mm in other cases

2 conic end

3 coating

4 steel

Figure F.4 — Drilling of artificial defect

Direct Sales by Manufacturer



AHP PLASTIK MAKINA

Cathodic Disbondment Test According to ISO 21809-3 (Outer design is subject to change without notice)

- According to ISO 21809-3
- Voltage control port is digital
- Digital reading of current and voltage
- Includes electrodes
- Voltage range of 0-5 V

Category

1. Equipment for Standards
2. Standards